Collar

split

optional full stainless steel version

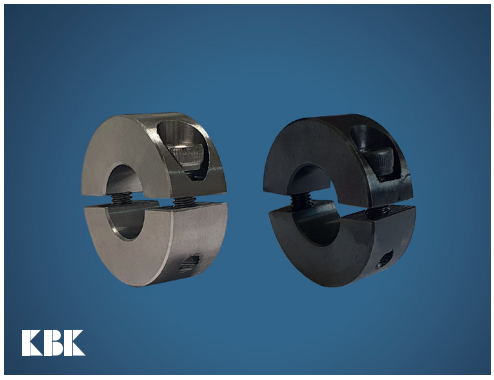

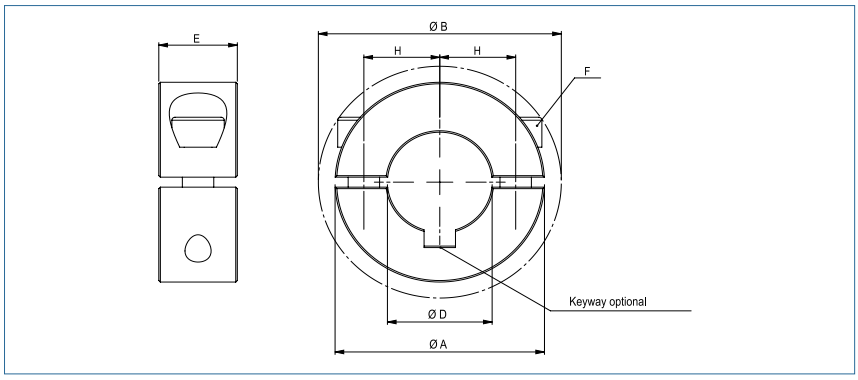

Order Code	**KR-G**	-	**28**	**steel blackened**
	Type		Size	
Order Code	**KR-G-VA**	-	**28**	**stainless steel**
	Type		Size	

Collar split											
Size	axial force N		Dimensions					F Screws (ISO4762)	Tightening Torque Screws Nm		Mass kg
	steel	stainless steel (VA)	Standard Bore D / H7	A mm	H mm	E mm	B mm		steel	stainless steel (VA)	
4	2288	1300	4	16	5	9	20.7	M3x8	2	1.3	0.011
5	2288	1300	5	16	5	9	20.7	M3x8	2	1.3	0.011
6	2288	1300	6	16	5	9	20.7	M3x8	2	1.3	0.010
8	2288	1300	8	18	6	9	22.4	M3x8	2	1.3	0.012
10	2288	1300	10	24	8	9	26	M3x10	2	1.3	0.022
12	3952	2288	12	28	9.5	11	31.8	M4x12	5	3	0.038
15	6448	3744	15	34	12	13	39.4	M5x16	10	6	0.065
16	6448	3744	16	34	12	13	39.4	M5x16	10	6	0.063
18	6448	3744	18	36	13	13	41.1	M5x16	10	6	0.069
20	9308	7748	20	40	14.5	15	46.4	M6x18	15	10	0.097
22	9308	7748	22	42	15.5	15	48.1	M6x18	15	10	0.103
25	9308	7748	25	45	16.5	15	50.8	M6x18	15	10	0.114
28	9308	7748	28	48	18	15	53.7	M6x18	15	10	0.123
30	9308	7748	30	54	21	15	58.6	M6x18	15	10	0.163
40	9308	7748	40	60	25	15	65	M6x18	15	10	0.163
50	14560	9672	50	78	32	19	87	M8x25	32	25	0.386

Bore tolerance	H7
Material	steel blackened stainless steel blank
Keyway	optional acc. DIN 6885
Temperature Range	-40 °C ~ 175 °C