KBK/BKI-10~500

Safety Coupling

with Collet Clamp and Inner Cone

optional nickel-plated!

optional stainless steel

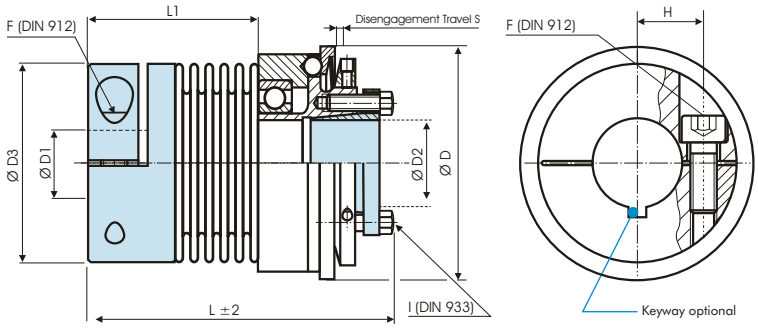

Order Code: KBK/BKI - 60 - 100 - 16H7 - 14H7 - 20Nm - C or D - 1

Type / Size | Length | Ø D2 (H7) | Ø D2 (H7) | Disengagement Torque | Overload Torque Range

C= Single Position D= Multi Position Engagement

KBK/BKI-x	Dimensions (mm)										Technical Ratings											
	Ø D	L	Ø D1	Ø D2	Ø D3	H	F	L1	l	S	Maximum Speed	Mass	Moment of Inertia	Overload Torque adjustable		Spring Stiffness			Misalignment		
	Outer Ø	Length	Bore Size (H7) min ~ max	Bore Size (H7) min ~ max	Hub-dia-meter		Screw (DIN 912) T_A (Nm)		Screw (DIN 933) T_A (Nm)		rpm. (1/min)	(kg)	J (kg cm²)	1 T_{KN} (Nm)	2 T_{KN} (Nm)	torsional x10³ C_T (Nm/rad)	radial C_R (N/mm)	axial C_A (N/mm)	radial ΔKr (mm)	axial ΔKa (mm)	angular ΔKw (°)
-10	49	65	6 ~ 25	6 ~ 14	40	15.5	M4	34	M3	0.7	11690	0.24	0.6	3 ~ 7	5 ~ 10	8.1	120	27	0.15	0.4	1.5
		75					5.1	43	2.1							6.8	29	17	0.3	0.6	2
-30	64	77.5	10 ~ 30	12 ~ 20	56	20	M6	40.5	M5	1.2	9540	0.72	3.0	5 ~ 15	10 ~ 30	38	720	50	0.15	0.6	1.5
		86.5					15	48.5	6							28	225	28	0.25	1	2
-60	79	90	12 ~ 32	15 ~ 25	66	23	M8	50	M6	1.2	8180	1.3	7.9	12 ~ 35	20 ~ 60	75	1150	90	0.15	0.6	1.5
		100					36	60	8.5							50	340	50	0.25	1	2
-80	94	106	14 ~ 42	20 ~ 35	82	28	M10	57.5	M6	2	6220	2.84	25	15 ~ 40	30 ~ 80	128	1200	80	0.2	0.5	1.5
		118					72	68.5	14							75	400	50	0.25	0.8	2
-150	94	106	19 ~ 42	20 ~ 35	82	28	M10	57.5	M6	2	6220	2.84	25	50 ~ 130	65 ~ 150	155	2020	145	0.2	0.5	1.5
		118					72	68.5	14							105	595	85	0.25	0.8	2
-200	109	113	22 ~ 45	20 ~ 40	90	31	M12	63	M6	2	5720	3.48	41	30 ~ 90	80 ~ 200	175	2500	147	0.2	0.5	1.5
		126					125	75	14							116	460	82	0.25	0.8	2
-300	119	131	30 ~ 60	25 ~ 45	110	39	M12	67	M8	2	5200	5.35	80	60 ~ 200	150 ~ 300	502	6300	280	0.2	0.5	1.5
		141					125	78	18							285	1400	145	0.25	0.8	2
-500	129	140	35 ~ 70	35 ~ 55	122	42	M12	70	M8	2	4470	7.54	134	80 ~ 250	200 ~ 500	690	7790	100	0.2	0.5	1.5
		151					125	81	26							320	970	85	0.25	1	2

Material: Bellows: Stainless Steel

Collet Clamp (Size 10 to Size 60): Aluminium
Collet Clamp (Size 80 to Size 500): Steel
Inner Cone: Steel

Keyway acc. DIN 6885 optional

Temperature Range: -30°C ~ 120°C